SPIRIT 115 DIRECT DRIVE

Applicability

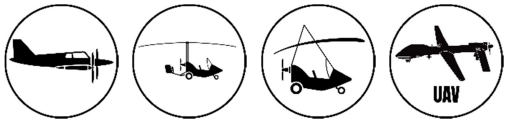

Engine data

Model/Code	Spirit 115 Direct Drive / W013 right rotation – W014 left rotation
Type	4 cylinder boxer - 4 Stroke fuel (Otto cycle)
Displacement [cm³ (in³)]	2545 (155)
Weight [Kg (lb)]	81 (178) dry (without accessories)
Dimension L x W x H [mm (in)]	590 x 762 x 419 (23.23 x 30 x 16.5)
Stroke X Bore [mm (in)]	81 x 100 (3.18 x 3.93)
Compression Rate	10.1 ÷ 1
Fuel	Mo.GAS min. AKI 90, R.O.N. 95, M.O.N. 85, LL100
Cooling System	Liquid with mechanical pump
Lubrication	Semi-dry sump, pressure oil feed assisted with internal pump
Timing System	2 valves per cylinder with S.O.H.C. (Single Over Head Camshaft)
Timing Driving System	Gear + chain with automatic chain tensioner
Pre-installed Accessories	Engine wiring loom, voltage regulator, start relay, dampers, ignition coils

Transmission

Electric data

Generator	Permanent magnet, oil cooled, 225W (12.5V-18A)
Starter	Electric 0.65kW with anti-kickback clutch
F.R.I.S. (Full Rendundancy Injector System)	ECU with dual injection and ignition; altitude and temperature compensation; Limp home strategy
CAN Data Trasmission	CAN Aerospace protocol

Performance

Max Power [kW (Hp)]	84.6 (115) @ 3400 rpm
Max Torque [Nm (lb-ft)]	253 (187) @ 2500 rpm
Max Continuous Power [kW (Hp)]	84.6 (115) @ 3400 rpm
Max Engine Speed [rpm]	3500
Power/Weight [Hp/Kg (Hp/lb)]	1.42 (0.65)
Fuel Cons. [Kg/h (lb/h)]	13.3 (29.3) @ 75 Hp
TBO [h]	2200

DIMENSIONS

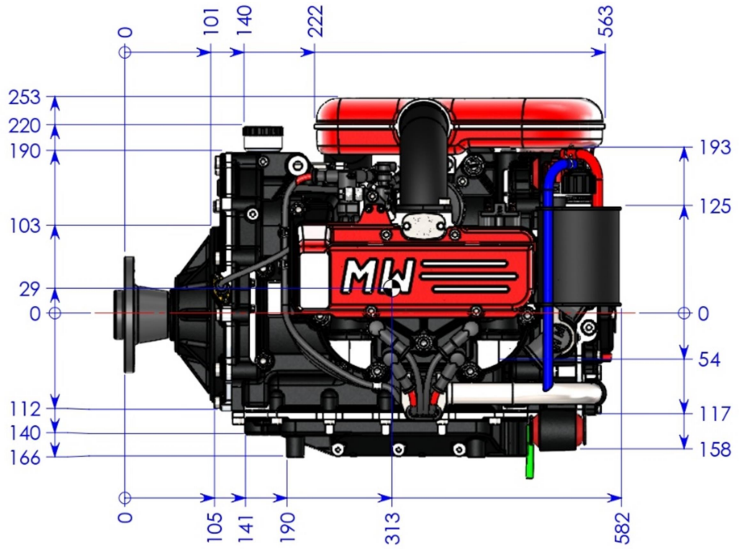
0
101
140
222
563
253
220
190
103
29
0
193
125
0
54
117
158
112
140
166
0
105
141
190
313
582

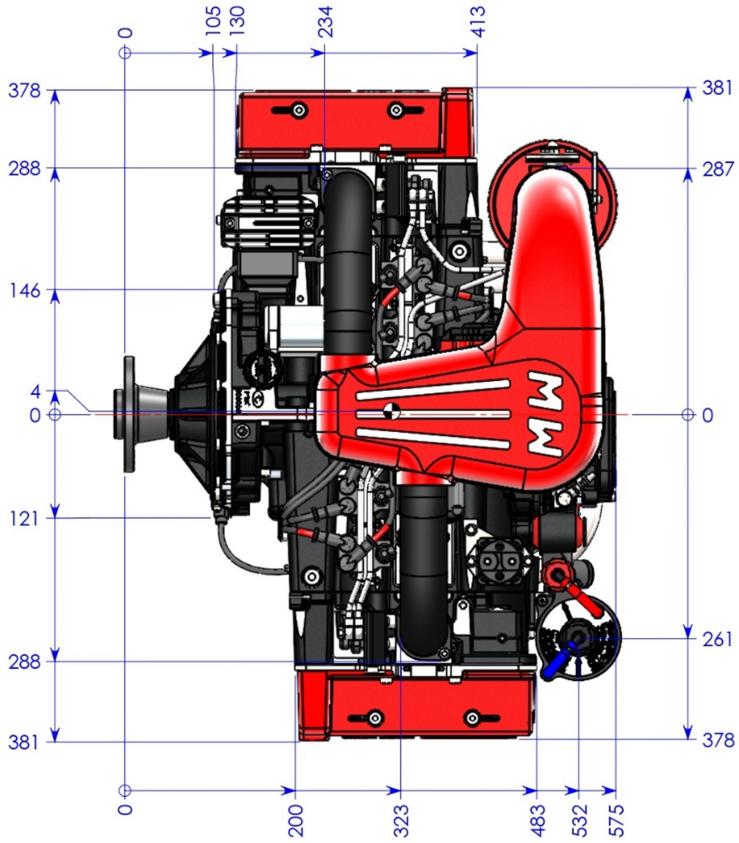
0
105
130
234
413
378
288
146
4
0
121
288
381
381
287
0
261
378
0
200
323
483
532
575

ATTACHMENT POINTS

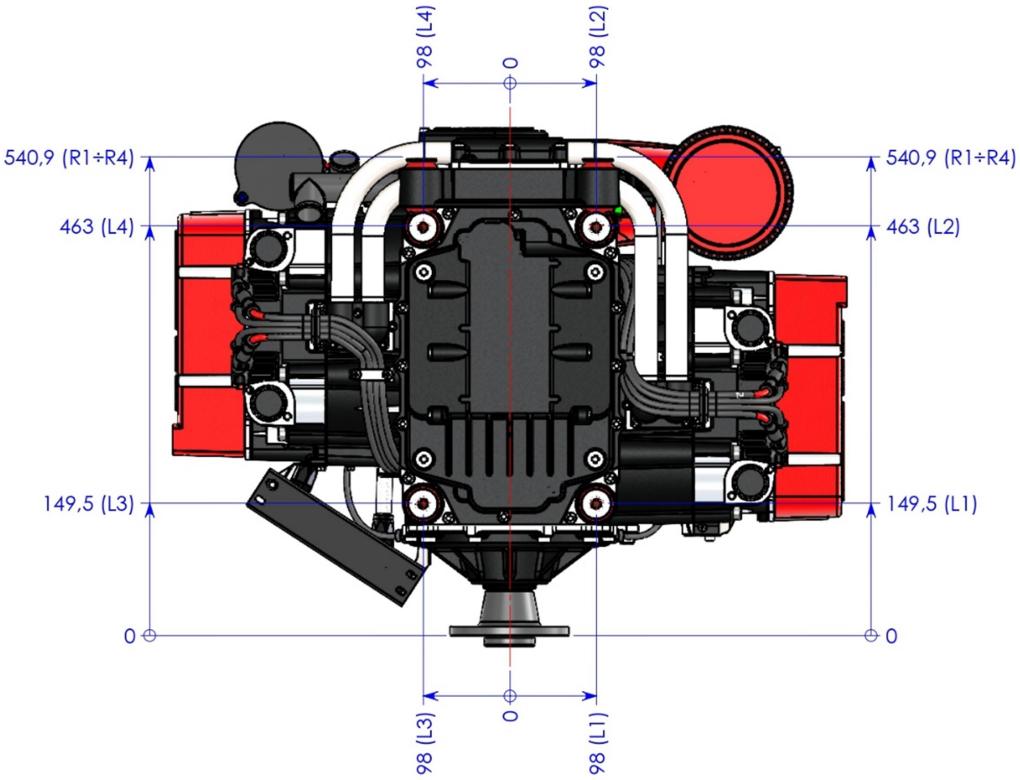

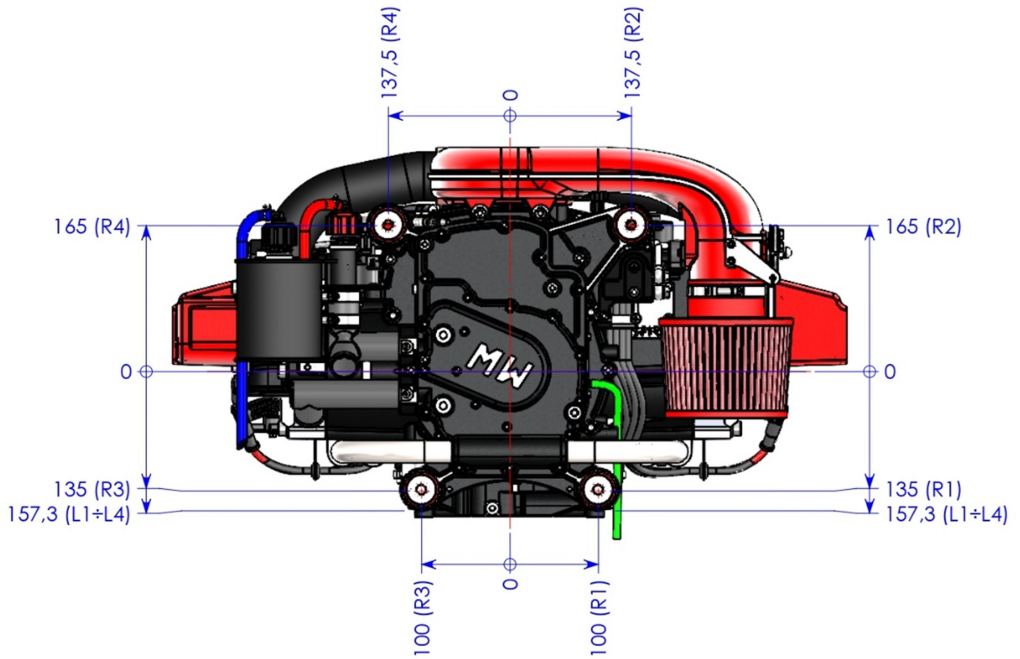

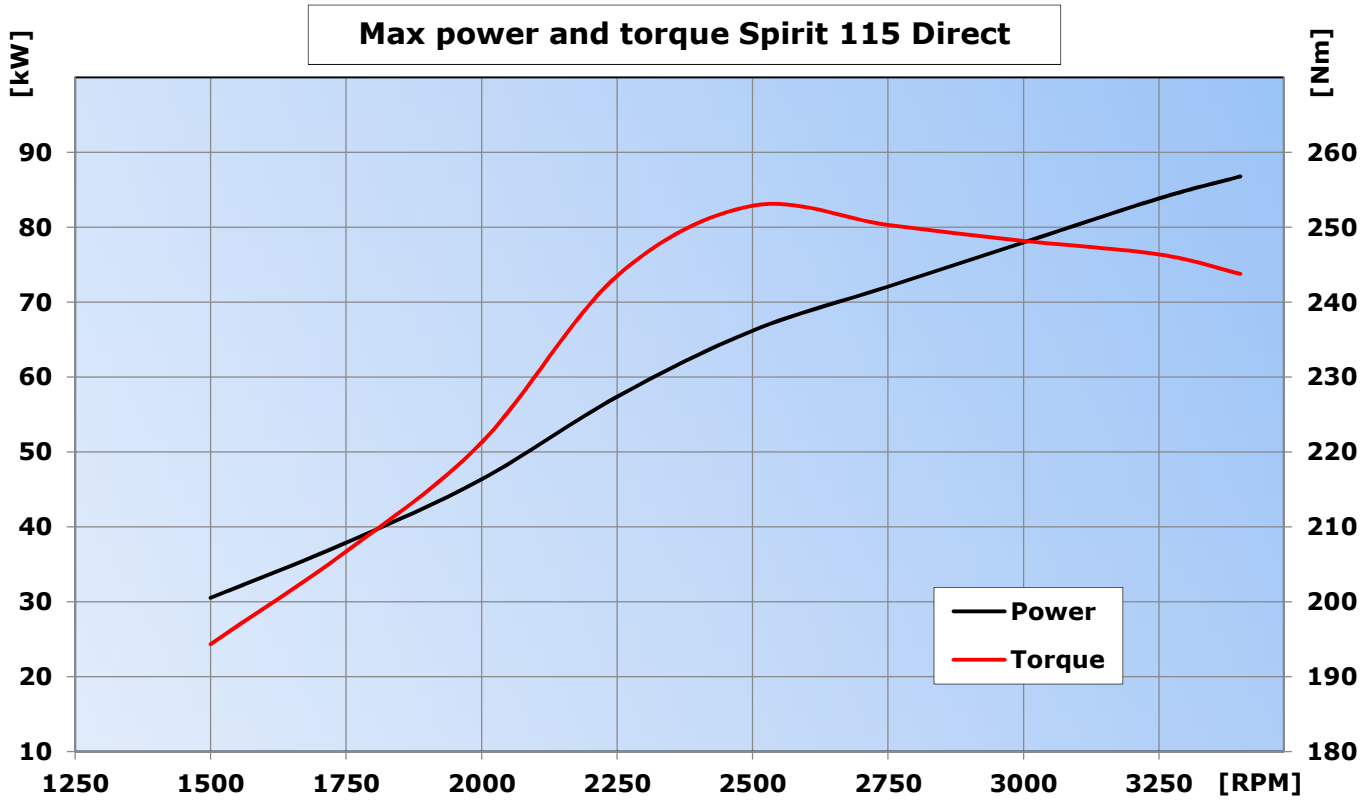
Max power and torque Spirit 115 Direct
[kW]
[Nm]
90
80
70
60
50
40
30
20
10
260
250
240
230
220
210
200
190
180
1250
1500
1750
2000
2250
2500
2750
3000
3250
[RPM]
Power
Torque

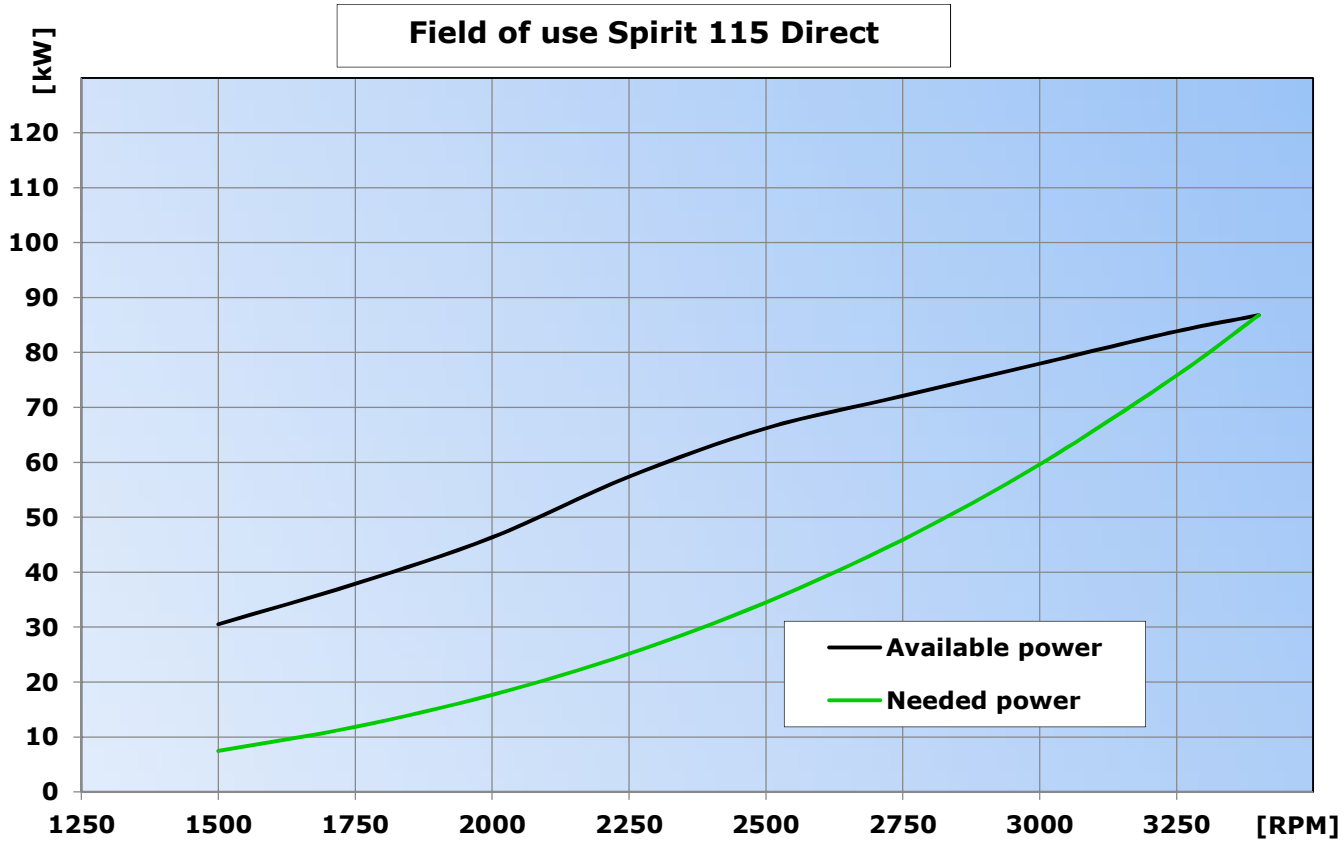
Field of use Spirit 115 Direct
[kW]
120
110
100
90
80
70
60
50
40
30
20
10
0
1250
1500
1750
2000
2250
2500
2750
3000
3250
[RPM]
Available power
Needed power

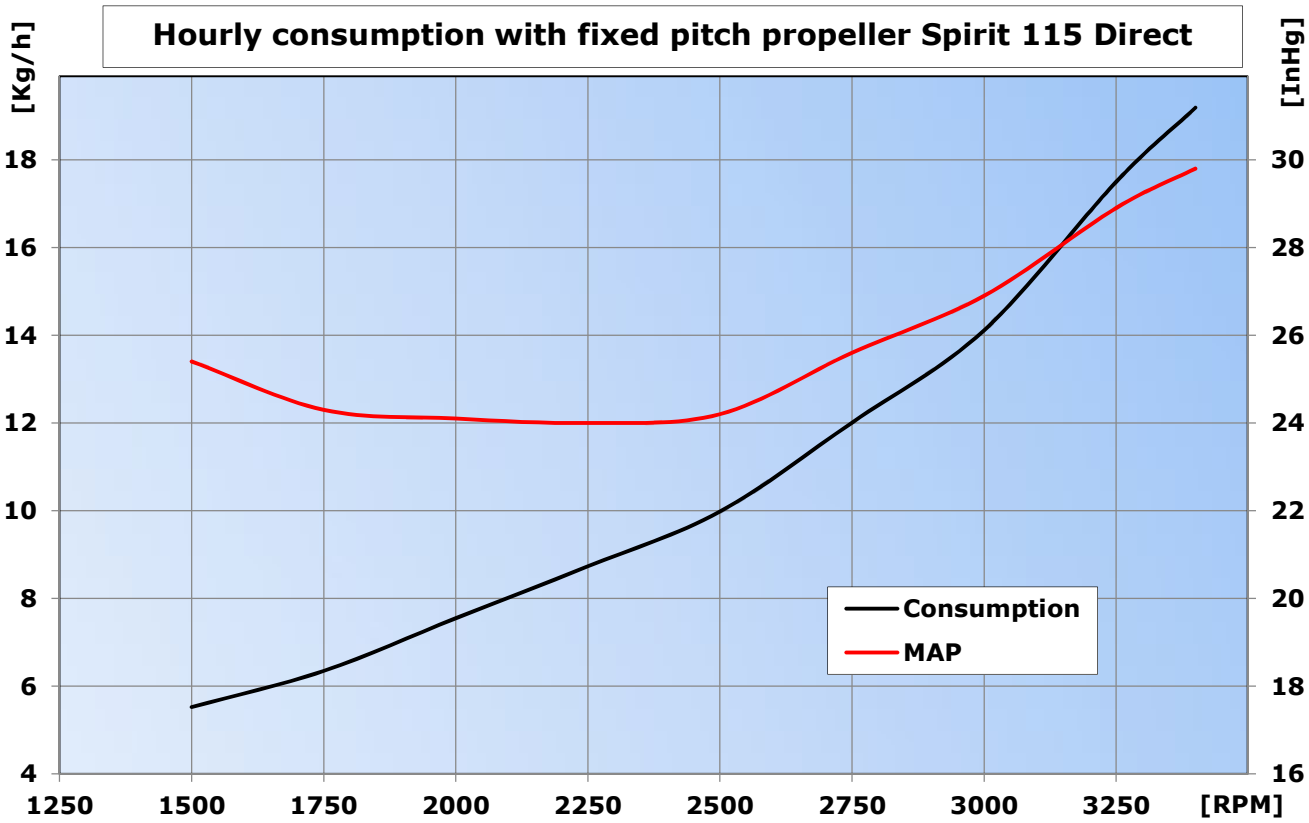
Hourly consumption with fixed pitch propeller Spirit 115 Direct
[Kg/h]
[InHg]
18
16
14
12
10
8
6
4
30
28
26
24
22
20
18
16
1250
1500
1750
2000
2250
2500
2750
3000
3250
[RPM]
Consumption
MAP

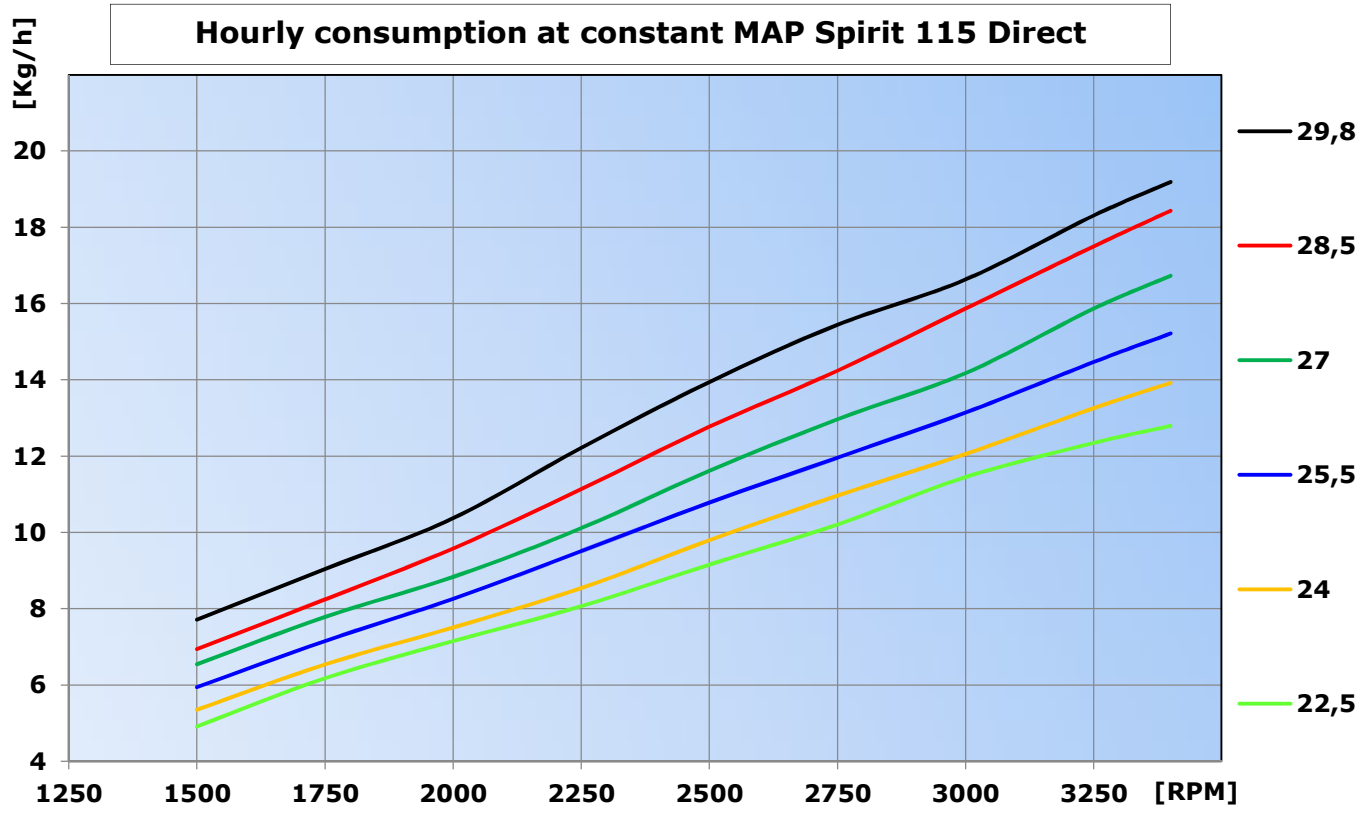
Hourly consumption at constant MAP Spirit 115 Direct
[Kg/h]
20
18
16
14
12
10
8
6
4
1250
1500
1750
2000
2250
2500
2750
3000
3250
[RPM]
29,8
28,5
27
25,5
24
22,5